1:1 SCALE

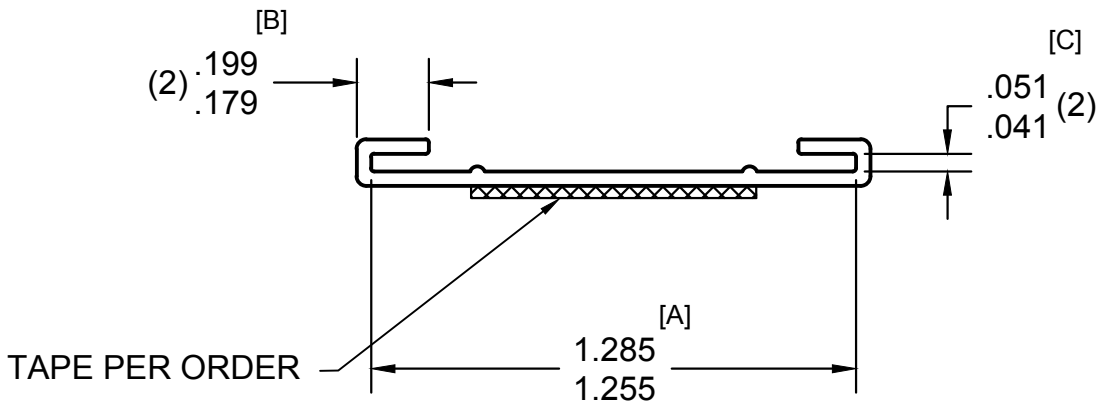

[D]

WALL = .038

REV.	DESCRIPTION	MODIFIED BY	DATE
A	1.285/1.255 WAS 1.285/1.265	SBP	11/28/11

popco inc.
MINNETONKA, MN

1 $\frac{1}{4}$" PRICE RAIL

SCALE	PART NO.	SIZE
2:1		A

DRAWN	APPROVED	DATE	DRAWING NO.	REV
SBP		11/28/11	EP1994	A