1:1 SCALE

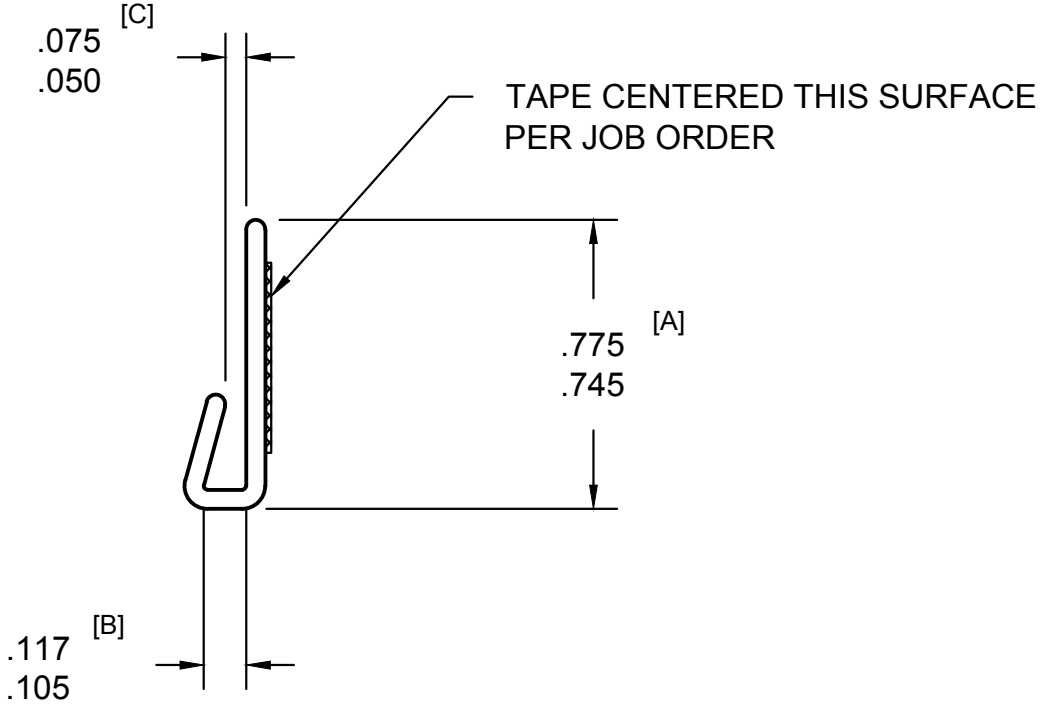


[D]
WALL = .050

| REV. | DESCRIPTION | MODIFIED BY | DATE |
|---|---|---|---|
| A | REVISED CONTROL SPECS | SBP | 03/30/11 |

popco inc.
MINNETONKA, MN

"J" CHANNEL

| SCALE | PART NO. | SIZE |
|---|---|---|
| 2:1 | | A |

| DRAWN | APPROVED | DATE | DRAWING NO. | REV |
|---|---|---|---|---|
| SBP | | 03/30/11 | EP2149 | A |