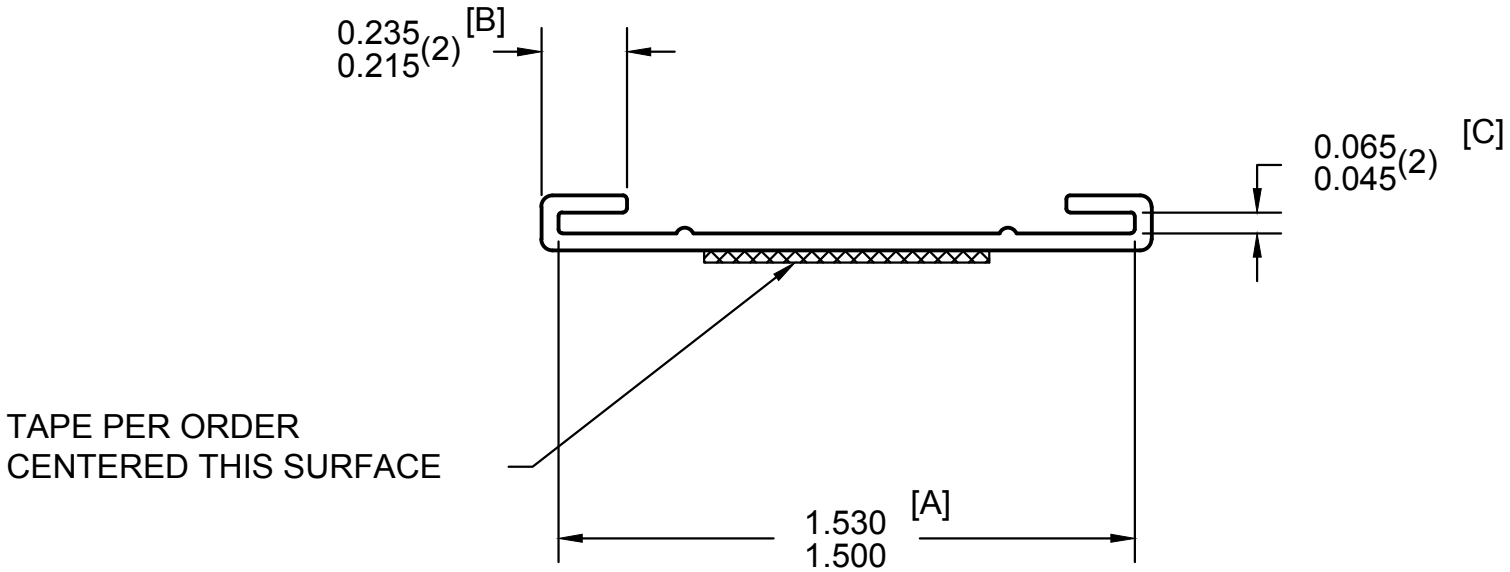

WALL=.045

REV.	DESCRIPTION	MODIFIED BY	DATE					
				popco inc. MINNETONKA, MN		1 1/2" PRICE RAIL		
					SCALE 2:1	PART NO.		SIZE A
				DRAWN SBP	APPROVED	DATE 08/04/10	DRAWING NO. EP1974	REV