1:1 SCALE

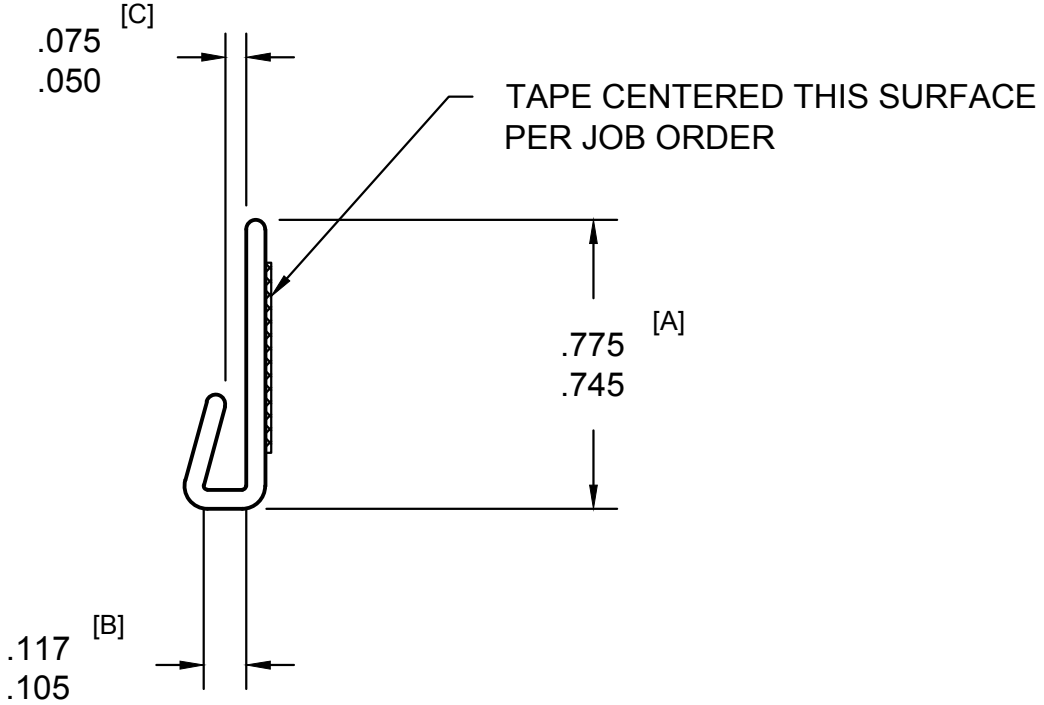

[D]
WALL = .050

REV.	DESCRIPTION	MODIFIED BY	DATE
A	REVISED CONTROL SPECS	SBP	03/30/11

popco inc.
MINNETONKA, MN

"J" CHANNEL

SCALE	PART NO.	SIZE
2:1		A

DRAWN	APPROVED	DATE	DRAWING NO.	REV
SBP		03/30/11	EP2149	A