1:1 SCALE

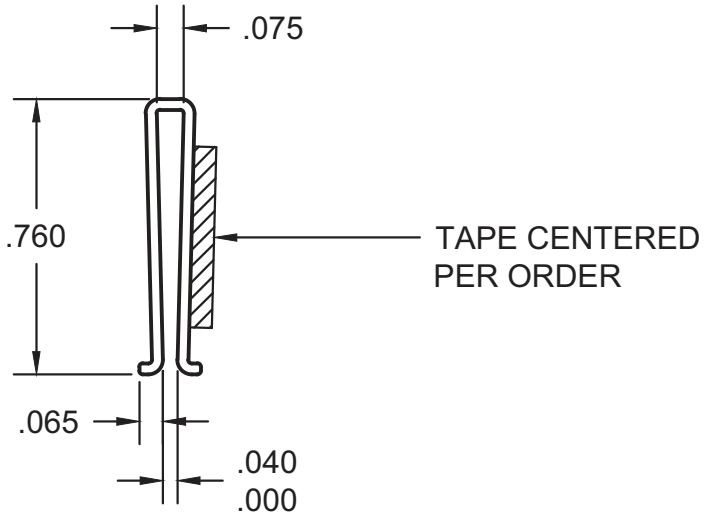

WALL = .030

REV.	DESCRIPTION	MODIFIED BY	DATE

popco inc.
MINNETONKA, MN

U CHANNEL .77

SCALE	PART NO.	SIZE
2:1		A

DRAWN	APPROVED	DATE	DRAWING NO.	REV
SBP		07/24/13	EP2751	