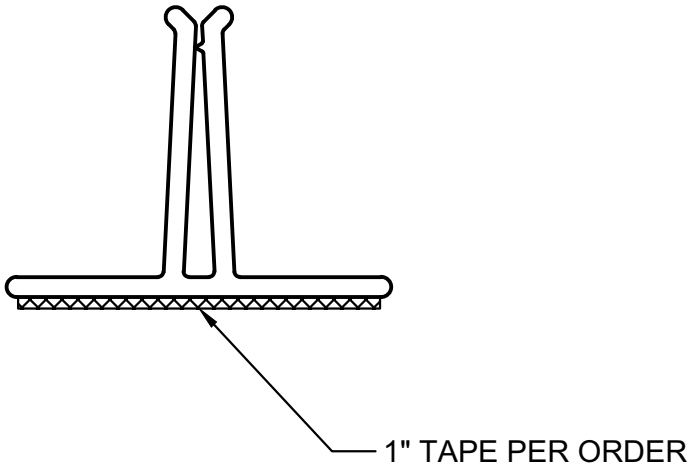

REV.	DESCRIPTION	MODIFIED BY	DATE

popco inc.
MINNETONKA, MN

NARROW SIGN FOOT

SCALE	PART NO.	SIZE
2:1		A

DRAWN	APPROVED	DATE	DRAWING NO.	REV
SBP		06/20/19	EP1914T1	