1:1 SCALE

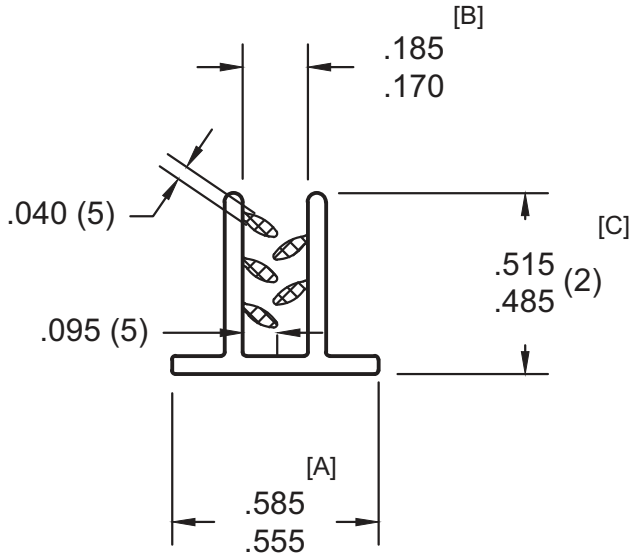

[D]

WALL = .047

REV.	DESCRIPTION	MODIFIED BY	DATE
A	UPDATED CONTROL SPECS	SBP	01/28/13

popco inc.
MINNETONKA, MN

FNF

SCALE	PART NO.	SIZE
2:1		A

DRAWN	APPROVED	DATE	DRAWING NO.	REV
SBP		01/28/13	EP2302	A